REALTÀ VIRTUALE

Tema N

Tutor:

- Pranovi Lorenzo
- Lorenzi Alessia

Stagisti:

- Olmos Luis Ernesto
- Gavazza Bruno

UNREAL ENGINE

Unreal Engine è un motore grafico sviluppato da Epic Games.

Applicazioni

FOTO 360°

360°, 3D

FORMATI PRINCIPALI

- Dual Fisheye
- Equirettangolare
- Cubemap

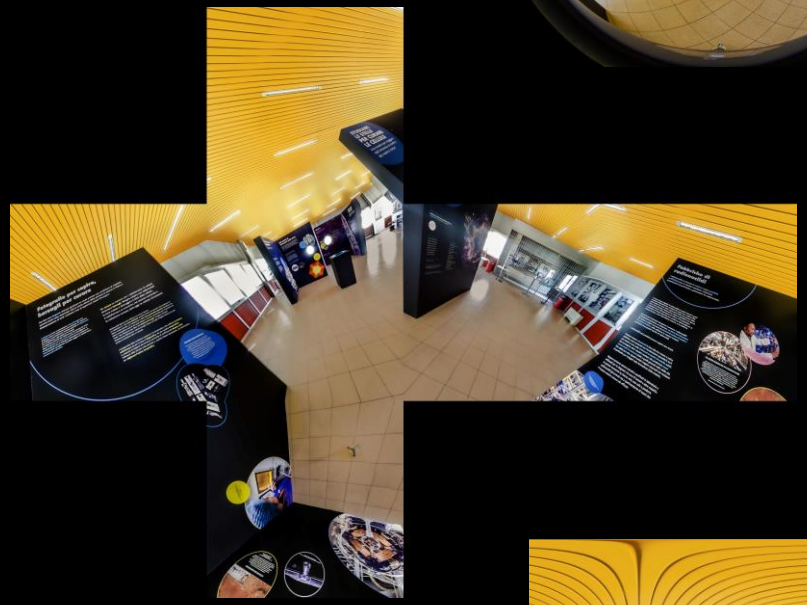

COLOR CORRECTION

È una fase della post-produzione in cui vengono migliorati luce e colori.

PLANIMETRIA DELLA STANZA

FUNZIONE

Serve a organizzare lo shooting e a supporto del posizionamento dei bollini nell’Engine.

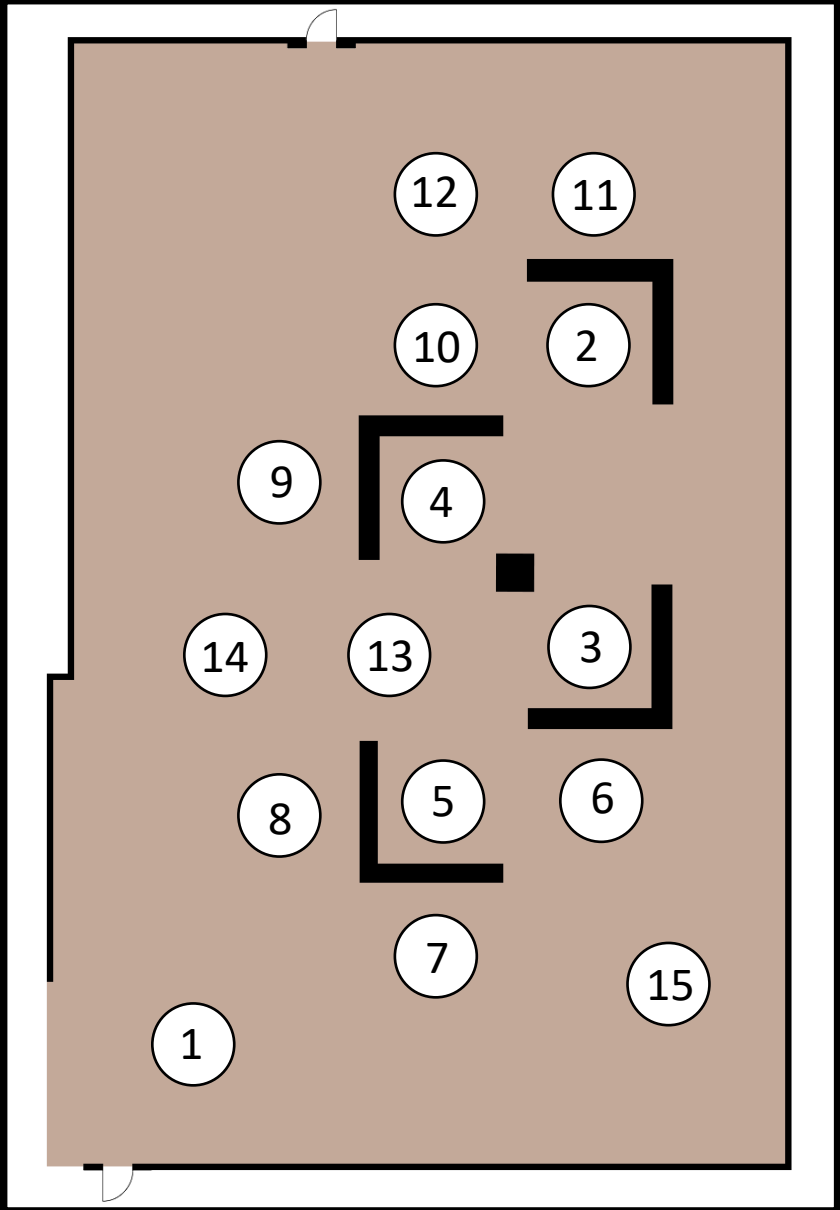

RISULTATO FINALE

BLUEPRINT

Linguaggio di programmazione

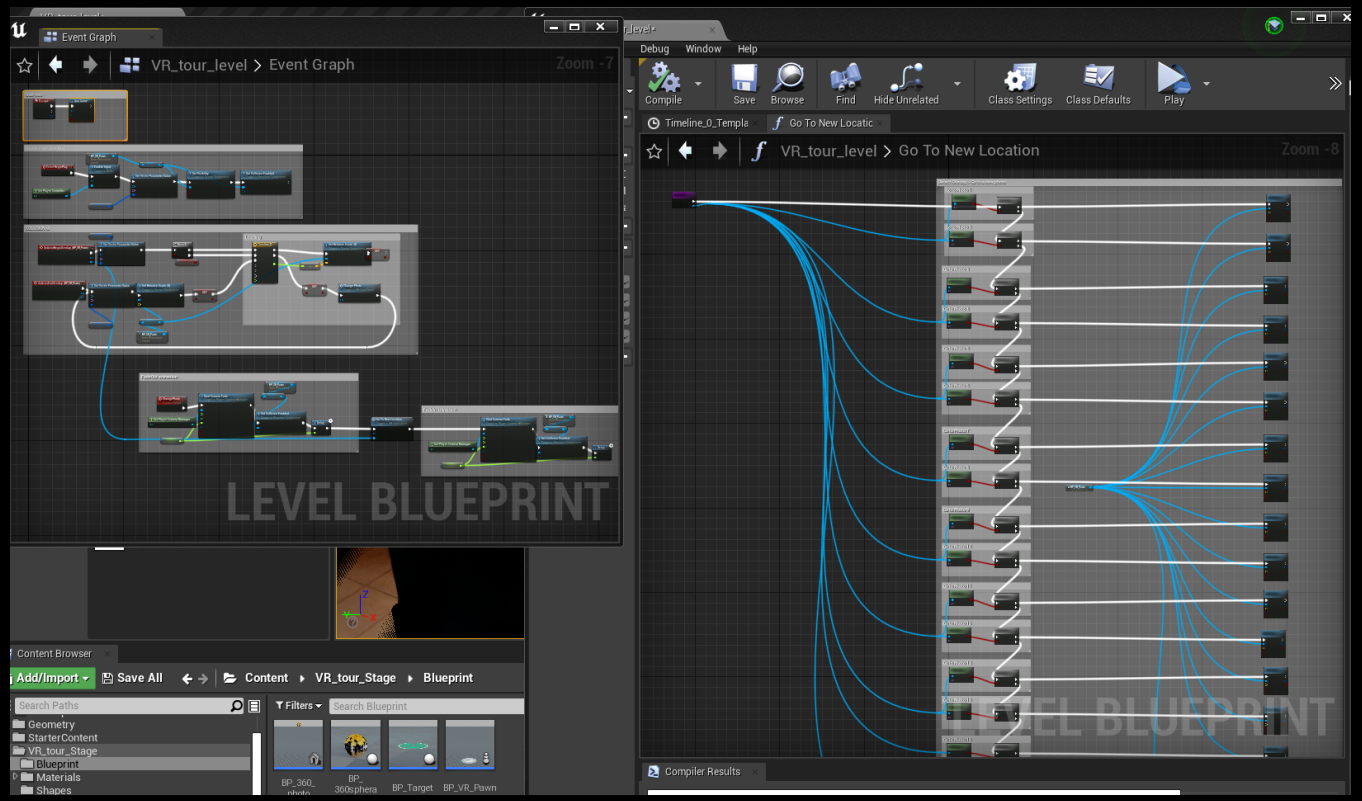

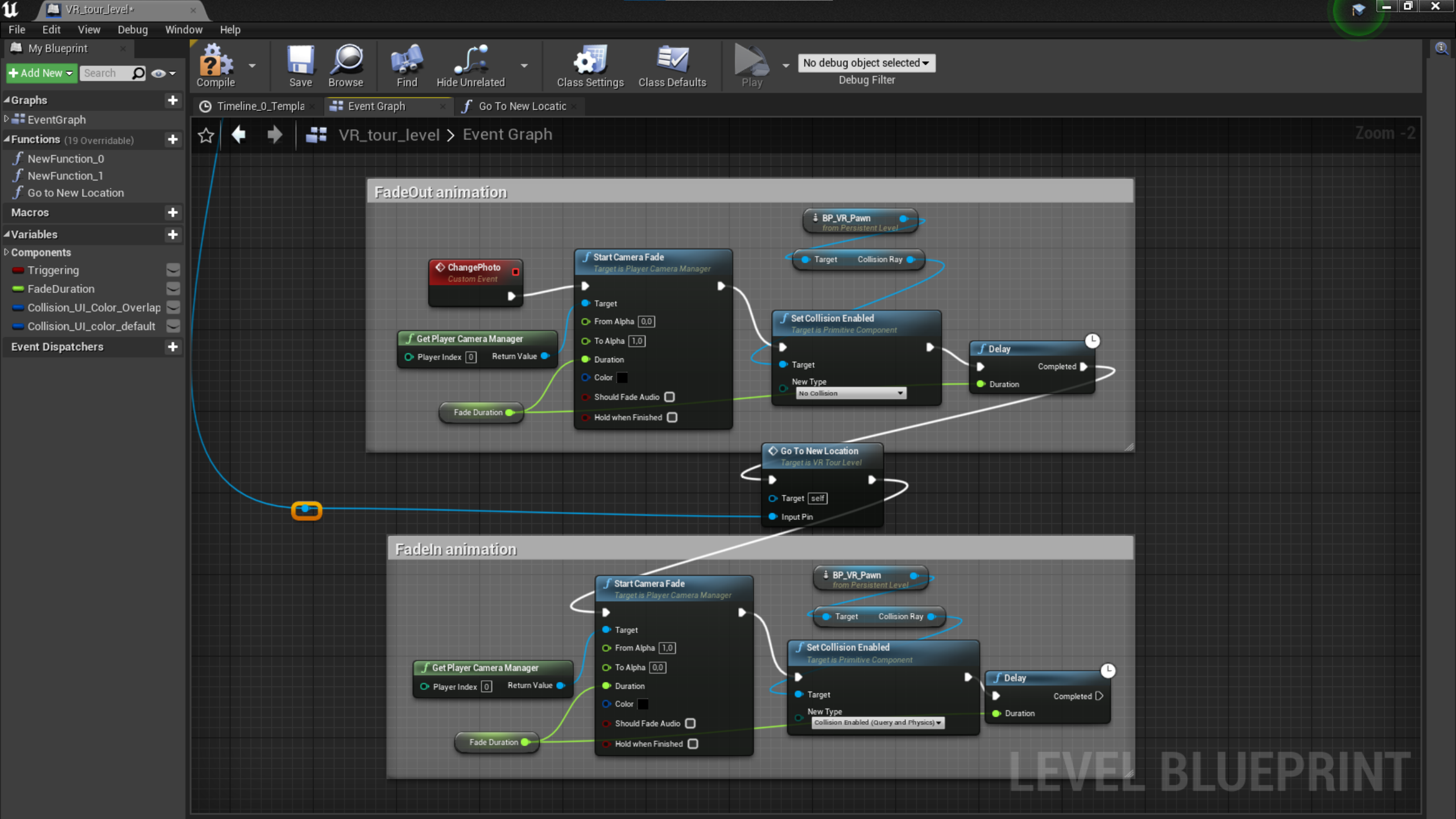
VR_tour_level*
File Edit View Debug Window Help
My Blueprint
Add New
Search
Graphs
EventGraph
Functions (19 Overridable)
NewFunction_0
NewFunction_1
Go to New Location
Macros
Variables
Components
Triggering
FadeDuration
Collision_UI_Color_Overlap
Collision_UI_color_default
Event Dispatchers
Compile
Save
Browse
Find
Hide Unrelated
Class Settings
Class Defaults
Play
No debug object selected
Debug Filter
Timeline_0_Templa
Event Graph
Go To New Locatic
VR_tour_level > Event Graph
Zoom -2
FadeOut animation
ChangePhoto
Custom Event
Start Camera Fade
Target is Player Camera Manager
Target
From Alpha 0,0
To Alpha 1,0
Duration
Color
Should Fade Audio
Hold when Finished
Get Player Camera Manager
Player Index 0
Return Value
Fade Duration
BP_VR_Pawn
from Persistent Level
Target
Collision Ray
Set Collision Enabled
Target is Primitive Component
Target
New Type
No Collision
Delay
Completed
Duration
Go To New Location
Target is VR Tour Level
Target self
Input Pin
FadeIn animation
Start Camera Fade
Target is Player Camera Manager
Target
From Alpha 1,0
To Alpha 0,0
Duration
Color
Should Fade Audio
Hold when Finished
Get Player Camera Manager
Player Index 0
Return Value
Fade Duration
BP_VR_Pawn
from Persistent Level
Target
Collision Ray
Set Collision Enabled
Target is Primitive Component
Target
New Type
Collision Enabled (Query and Physics)
Delay
Completed
Duration
LEVEL BLUEPRINT

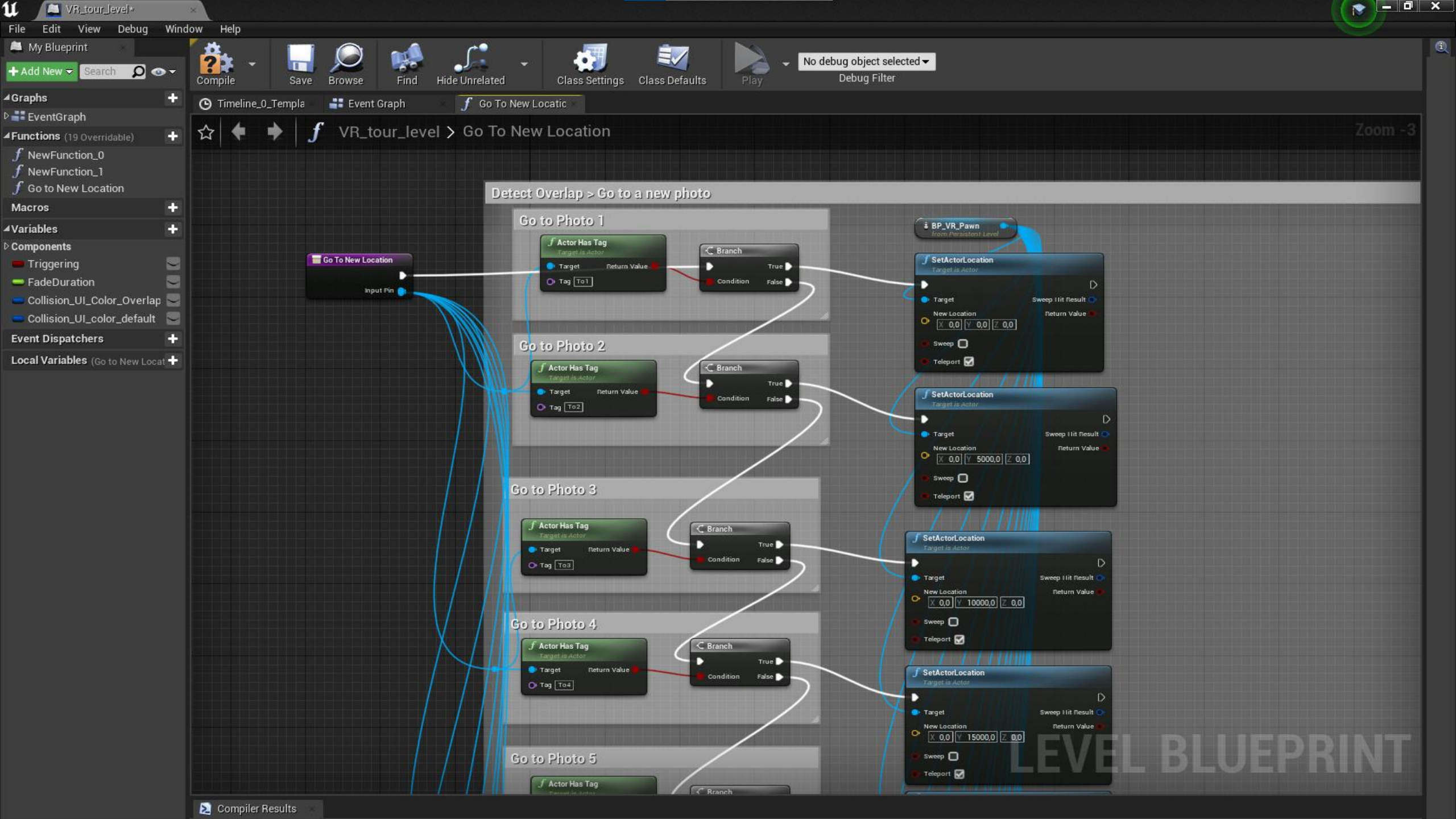
VR_tour_level*
File Edit View Debug Window Help
My Blueprint
Add New
Search
Graphs
EventGraph
Functions (19 Overridable)
NewFunction_0
NewFunction_1
Go to New Location
Macros
Variables
Components
Triggering
FadeDuration
Collision_UI_Color_Overlap
Collision_UI_color_default
Event Dispatchers
Local Variables (Go to New Locat
Compile
Save
Browse
Find
Hide Unrelated
Class Settings
Class Defaults
Play
No debug object selected
Debug Filter
Timeline_0_Templa
Event Graph
Go To New Locatic
VR_tour_level > Go To New Location
Zoom -3
Detect Overlap > Go to a new photo
Go to Photo 1
Go to Photo 2
Go to Photo 3
Go to Photo 4
Go to Photo 5
Go To New Location
Input Pin
Actor Has Tag
Target is Actor
Target
Return Value
Tag
To1
To2
To3
To4
Branch
True
Condition
False
BP_VR_Pawn
from Persistent Level
SetActorLocation
Target is Actor
Target
Sweep Hit Result
New Location
Return Value
Sweep
Teleport
X 0,0 Y 0,0 Z 0,0
X 0,0 Y 5000,0 Z 0,0
X 0,0 Y 10000,0 Z 0,0
X 0,0 Y 15000,0 Z 0,0
LEVEL BLUEPRINT
Compiler Results

VIDEO 360°

Adobe Premier

PROGETTO ASSEMBLR

Progetto AR di un quadrupolo magnetico

DOWNLOAD ASSEMBLR

RISULTATO FINALE

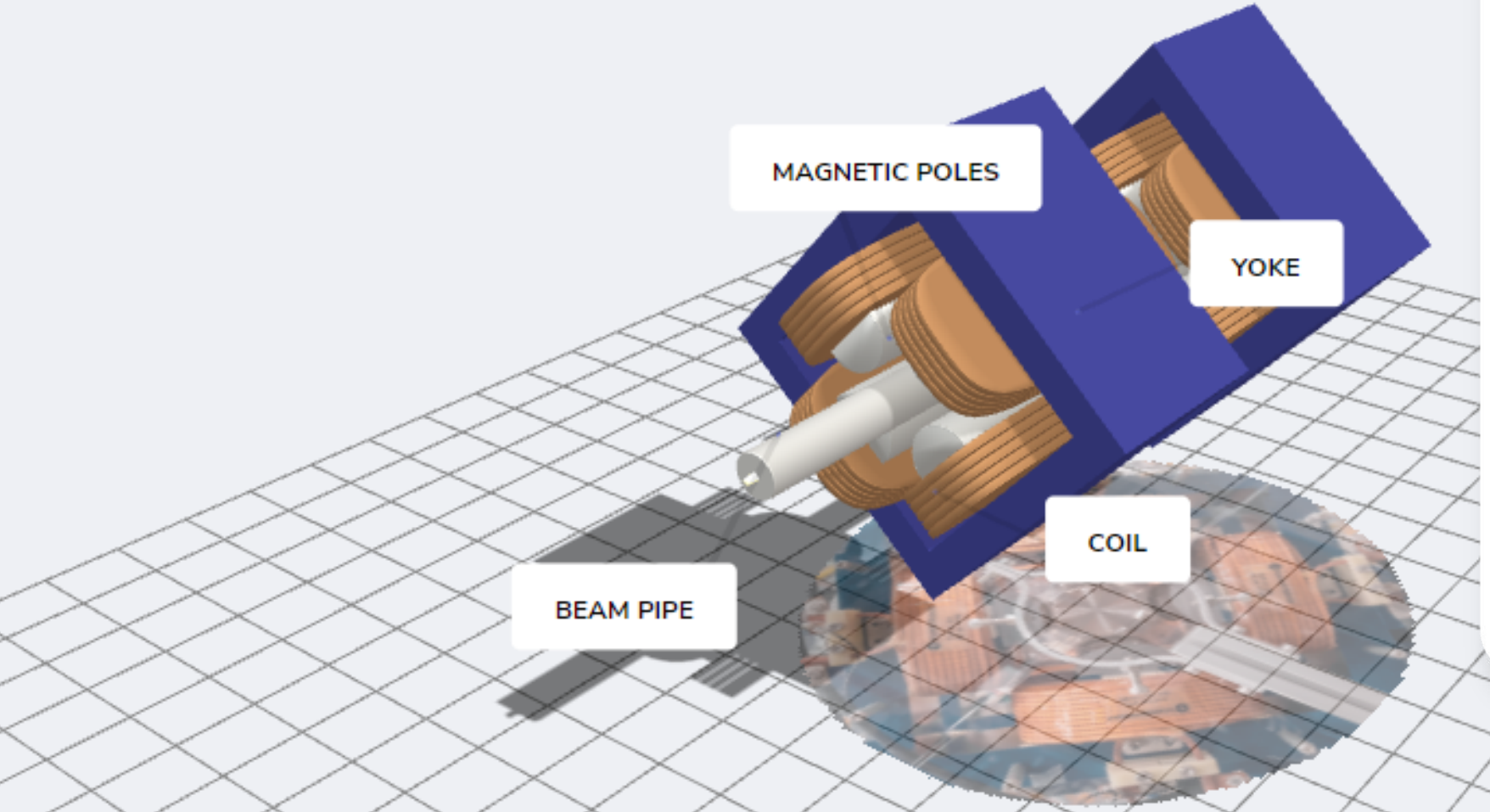

GRAZIE PER L’ATTENZIONE